THE PERFECT MATCH OF TECHNOLOGY AND ARTISTRY

Design inspired by classic SLR cameras
Lightweight design, more comfortable to hold
Feature anti-slip texture and camera-style shutter exposure button

CONCISE UI EASY TO USE

Equipped with a 3.5-inch IPS capacitive touch screen.
Sensitive touch for enhanced operation ease.
Simplified UI for intuitive display
Diverse options at your fingertips!

360° PANORAMIC SHOOTING

Constant high-frequency DC x-ray machine
Capable of achieving 360-degree rotation for both vertical and horizontal directions
Meet the shooting needs of different tooth positions

Guilin Woodpecker Medical Instrument Co.,Ltd.
Information Industrial Park, Guilin National High-Tech Zone, Guilin, Guangxi, 541004 P. R. China
Sales Dept.: +86-773-5873196/2350599
After-sales Service Dept.: +86-0773-5827898
E-mail: woodpecker4@glwoodpecker.com
Website: http://www.glwoodpecker.com

EC REP Borkstrasse 10 · 48163 Muenster · Germany
MedNet EC-Rep GmbH

WOODPECKER

Compact Lightweight Powerful

Smart Ray

Dental X-Ray Device

HIGH-FREQUENCY X-RAY TUBE

Innovative technology safeguards x-ray output.
Guarantee outstanding imaging quality.

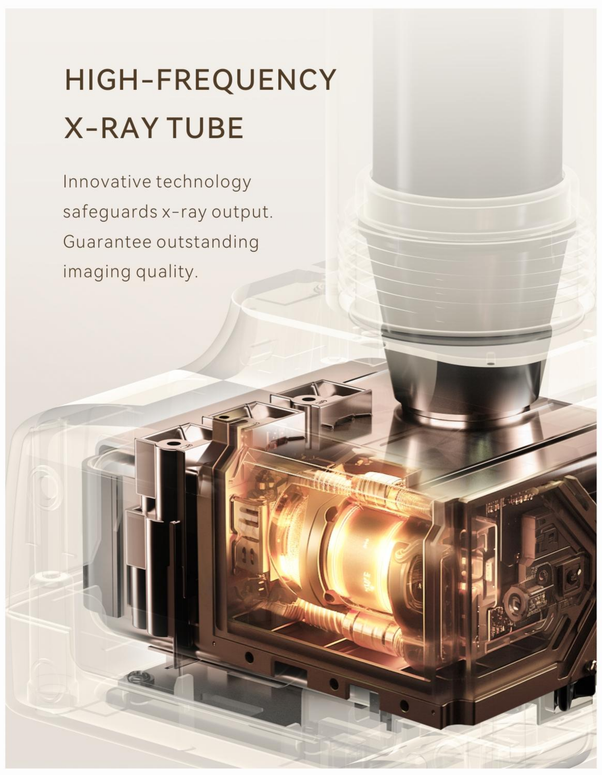

MAXIMUM PERFORMANCE EFFORTLESS SHOOTING

140W (70kV 2mA) ultra-high emission power
Efficient shooting, less exposure time, avoiding multi-images caused by unsteady shooting
Present you with high-definition images for crystal-clear details

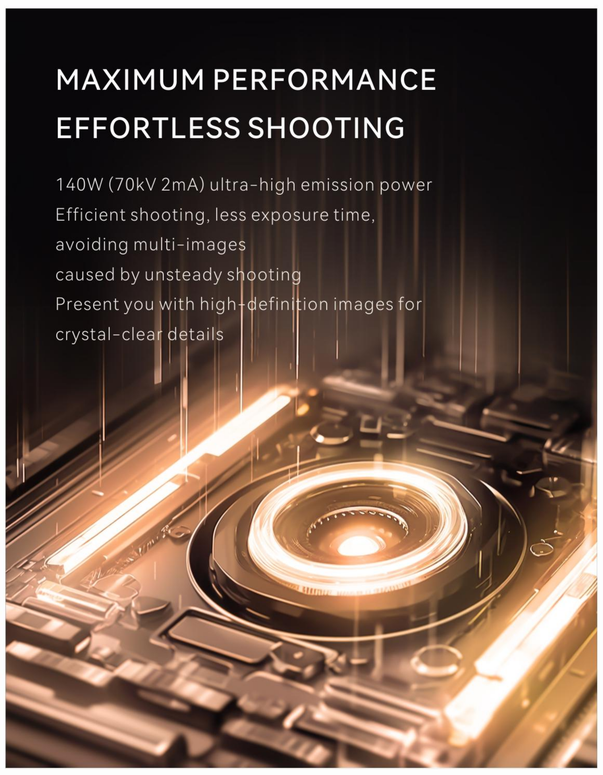

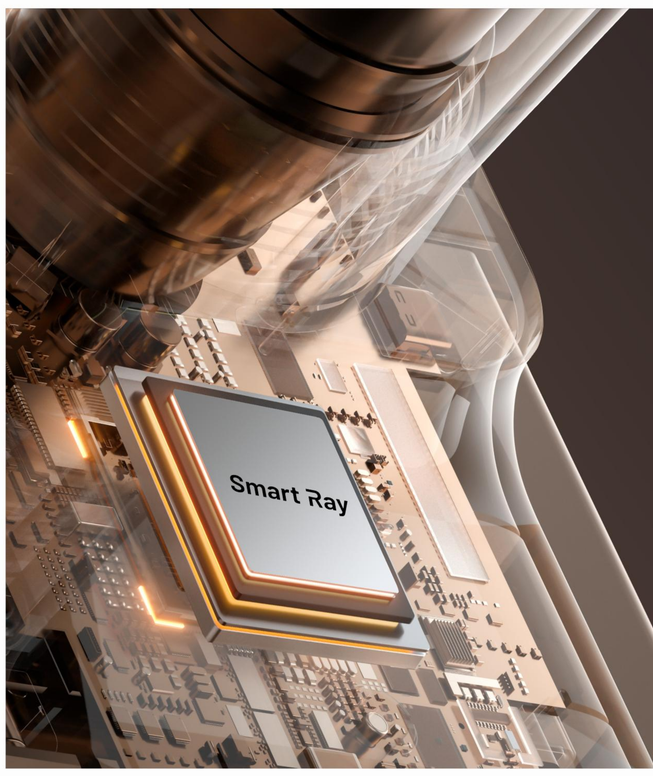

ADVANCED USA CHIPS

Advanced USA chip enables high-frequency closed-loop control for stable output.
Reduce the impact of low battery power on x-ray quality.

REAL-TIME DISPLAY OF GRIP ANGLE

USA angle sensor for real-time display of grip angle
Shooting angle can be calibrated as per patient posture
Optimal shooting angle ensures optimum imaging quality!

-30°
angle

COMPREHENSIVE PROTECTION, MAXIMUM SAFETY

Oil tank and beam limiter use 99.9% pure lead shieldingto maximize the protection against radiation leakage.
The distance from the focus to the end face of beam limiter is 20cm, The radiation leakage from the body surface is ≤ 0.25mGy/h
Maximize operators' safety, keeping them away from ionizing radiation!

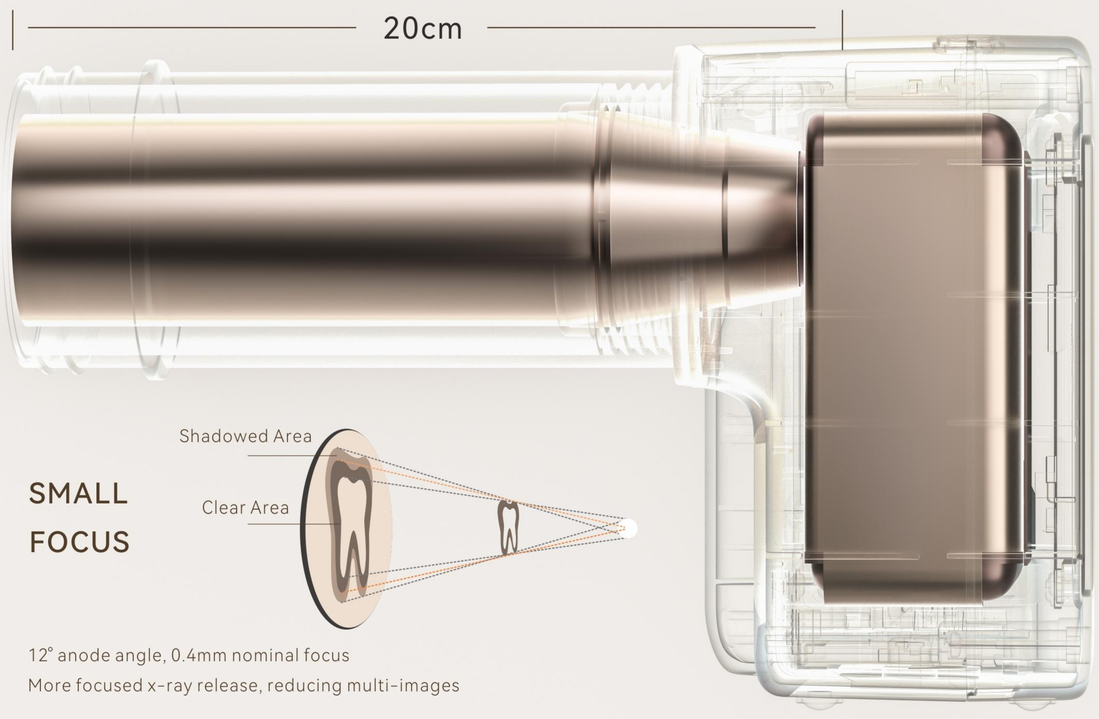

SMALL FOCUS

12° anode angle, 0.4mm nominal focus
More focused x-ray release, reducing multi-images

LONG-LASTING BATTERY FOR UNINTERRUPTED PERFORMANCE

2500mAh×3s high-capacity lithium battery for longer endurance.
500+ shots on a full charge.

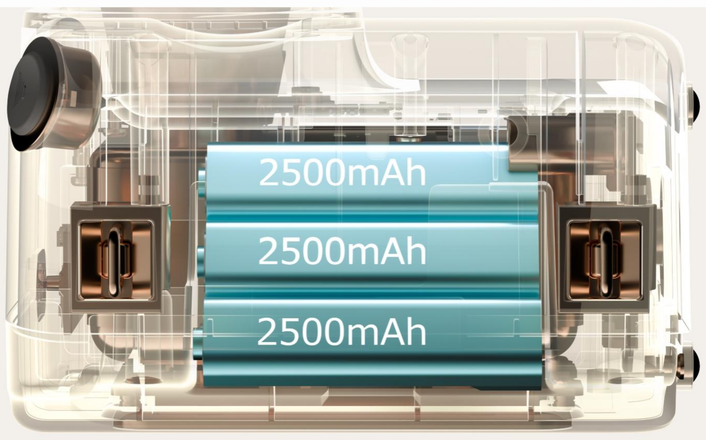

WIRELESS RF CONNECTION TECHNOLOGY

Utilize wireless RF connection technology
Quick response and convenient operation
Great accessibility for uninterrupted shooting

SUPER FAST CHARGING

48W

48W charging power1h fast full charge Less time waste, higher work efficiency